P8iW

In-Wall/In-Ceiling Speaker

Technical Specifications

- High-output architectural speaker with flexibility to be used for Top/Height, Wide, Main and Surround channels
- Optimized for the placement requirements of immersive sound systems
- Based on Procella's award-winning P8
- Tweeter and waveguide are angled at 15° to enable direction of high frequencies to listening positions
- Square enclosure and grille ensure visual symmetry for all speakers in the room
- 1.5" compression driver on circular constant directivity waveguide: 90° symmetrical from 1.5kHz
- High-output 8" woofer with 50mm voice coil
- Identical Voice™ timbre-matched to Procella P860, P815, P610, P28, P8, P6 and P5
- Sealed-box design
- Both black and white grilles included

Impedance	8 Ohms nominal Above 10 Ohms in working range, phase angles less than 30 degrees
Power handling	
Continuous	250 Watt
Peak	1,000 Watt
Sensitivity	
1m/1W	92dB
Maximum SPL	122dB continuous, 128dB peak
Frequency response	
-3dB points	70Hz and 20kHz
Dispersion pattern	
-6dB	Constant directivity; 90° symmetrical from 1.5kHz with 15° tilt
Crossover	4th Order Linkwitz-Riley 1.6 KHz
Connectivity	Gold plated spring terminals

Components	
Midrange	8" high output driver with 50mm voice coil in 26 litre sealed box
High Frequency	1.5" driver with a Polyester diaphragm on elliptical constant directivity wave guide
Construction	Void free MDF internally cross braced Studio grade vinyl enclosure
Dimensions	
HxWxD	530 x 530 x 179 mm 20.875" x 20.875" x 7"
Shipping Carton	
HxWxD	600 x 600 x 400 mm 23.675" x 23.675"x 15.75"
Net weight	12.9 Kg 28.5 Lbs
Shipping weight	17 Kg 37.5 Lbs
In the box	Loudspeaker, black grille, white grille, installation guide
Assembly	Sweden; 100% QC testing

P8iW

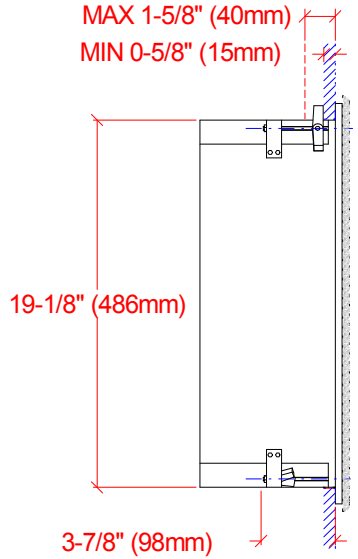

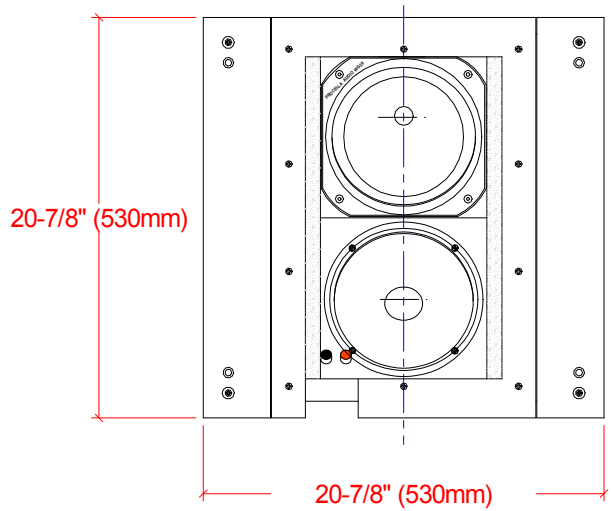

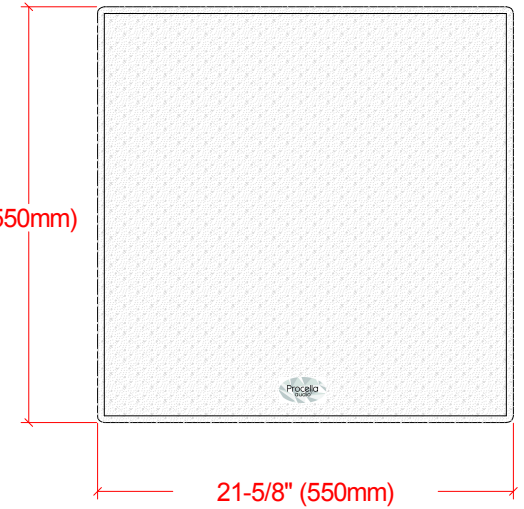

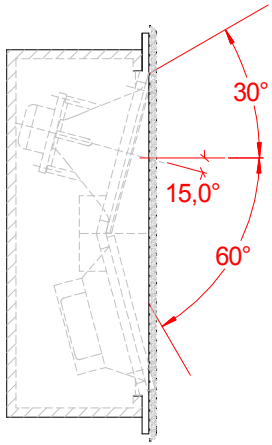

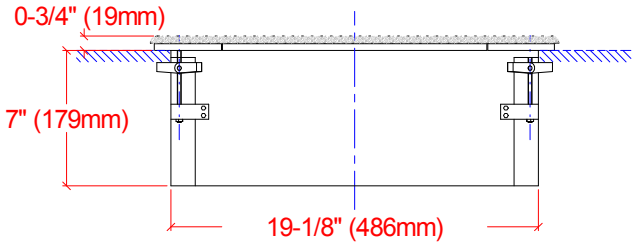

Wall cut-out =19,3"x19,3" (490x490mm)
Weight = 8,5kg
Box volume = 26L
Package: 600x600x400mm

Procella audio®

Procella P8iW External dimensions
Anders Uggelberg 18/12 -17
UPD:

P8iW_ext_dim.CAD
Scale 1:10 (PDF/JPG-file not to scale)

© 2017-18 Procella Audio Svenska AB, Specifications subject to change. www.procella.audio